SPYKER WORKSHOP - 1/10TH PONTOON KIT

V1.1

The Ultimate RC Pontoon/Tritoon Boat KIT

Customizable
High-Quality Resin Prints
Step-by-Step Guide

Designed by Ryan at
spykerworkshop.com

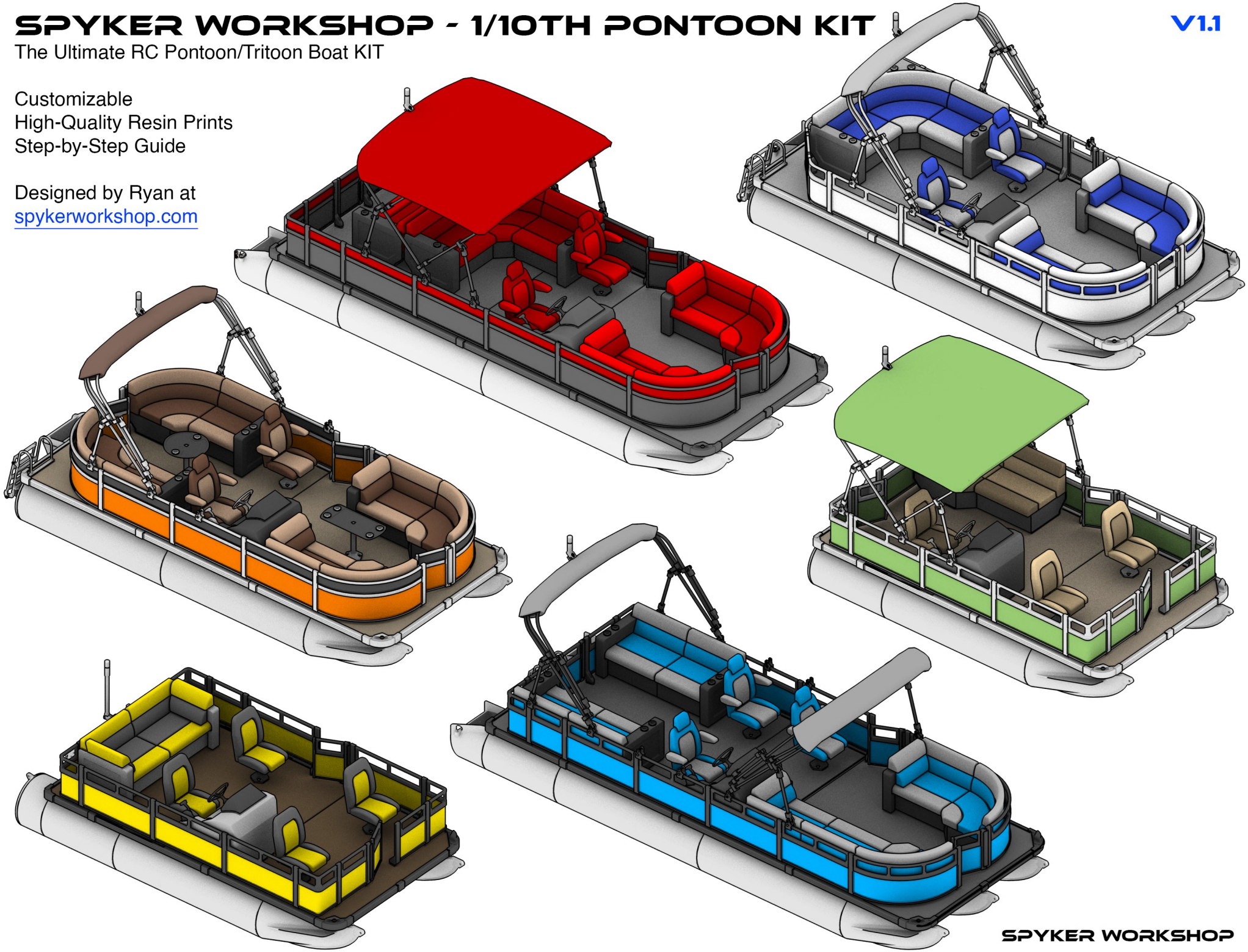

SPYKER WORKSHOP - 1/10TH PONTOON KIT

INTRODUCTION

Welcome to the fascinating world of scale RC boating! You are now the proud owner of a Resin 3D Printed 1/10th scale RC Pontoon Boat Kit, meticulously designed and engineered by Ryan @ Spyker Workshop. This manual provides step-by-step instructions, tips, and safety guidelines to ensure an enjoyable and successful building experience. Please note that this guide serves as a general roadmap; feel free to exercise your creativity as our pontoons are highly modular.

MODULARITY AND CUSTOMIZATION

Design Flexibility: Our pontoons are highly modular, allowing you to create a wide range of designs. This manual serves as a guideline but certainly does not cover all the variations you can explore.

SAFETY AND PRECAUTIONS

Eye Protection: Resin-printed parts can sometimes break or go flying during handling or assembly. Always wear safety glasses to protect your eyes from potential injury, durning support removal specifically.

Sanding Resin Prints: Due to the fine dust produced while sanding resin prints, work in a well-ventilated area. Consider using a filtered fan to catch airborne particles. Always wear a dust mask and eye protection.

Chemical Safety: Be cautious when using chemicals like epoxy or paint. Use gloves and work in a well-ventilated area.

MATERIALS & DURABILITY

Fragile Material: Resin-printed parts are sensitive and can be brittle, handle them with care during assembly and use. Never drill into resin parts they will crack. If you need to make a hole, carefully rotate an X-Acto blade.

Repairs: Don’t worry if a part is broken, breaks or cracks can be easily repaired using super glue!

Temperature Sensitivity: Avoid exposing resin components to extreme cold, as this makes them brittle.

WORKING WITH RESIN PRINTS

Support Material Removal: WEAR SAFTEY GLASSES!!! Resin is a very hard mateiral and while removing supports it can snap off and go flying. Carefully snip away support material using flush cutters, taking care not to damage the main part.

Sanding: Sand the surface where the support was attached. Sand rounded surfaces or any imperfections to smooth them out. The finished product is directly related to the effort you put into sanding. A thorough sanding job will result in a smoother, more professional finish. Take your time to sand all surfaces and edges for optimal results. Any defects use body filler or bondo.

Warping: Some resin parts may show signs of warping due to the characteristics of the resin and post-curing process. To return them to their proper shape, apply heat using a heat gun or immerse them in hot water until they become pliable. Once pliable, gently bend them back into shape.

Painting: Clean the parts before painting, such as blowing off the sanding dust with an air gun, or washing with water and allowing to dry. This kit is designed for spray painting, parts are split up to easily paint before assembly. Clean parts and choose a spray paint like Rust-Oleum for best results. Finish with a clear coat. We used Rust-Oleum® Bright Coat Metallic Aluminum for our pontoon hulls.

REQUIRED TOOLS & SUPPLIES

Given the modular and intricate nature of this kit, we strongly recommend you thoroughly review this entire instruction manual before starting. This will give you an idea of the specific tools and supplies you may need for your personalized build.

Tools: Examples include, but are not limited to, screwdrivers, craft knives, tweezers, and flush cutters etc.

Glue: We recommend using gap-filling hobby-grade super glue for assembling the resin parts. It's effective, quick-drying, and ensures a strong bond.

Additional Supplies: You will need other materials not included in the kit, such as primer, paint, batteries, electronics, motors, fabric and more etc.

TROUBLESHOOTING Customer Support: Please email us at spyker.sales@hotmail.com with any help you need!

SPYKER WORKSHOP - 1/10TH PONTOON KIT

Pontoon Models

Use this page as a guide for ordering and assembling your boat.

Boats can be easily upgraded at anytime. (Items sold individually too)

Everything is very modular and the assembly is similar across all models. (See the 'Pontoon Assembly Guide' page)

Deck Length
16'
(Scale 19.2")

16' Pontoon w/ Transom Pod
(Needs lightweight electronics, less furniture)

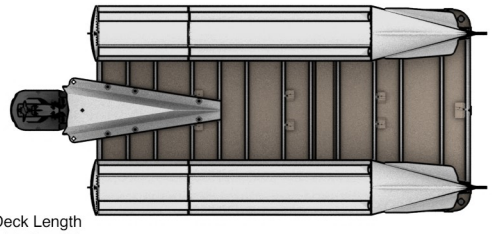

Model# 16-00

16' Pontoon w/ Transom Pod + Extensions

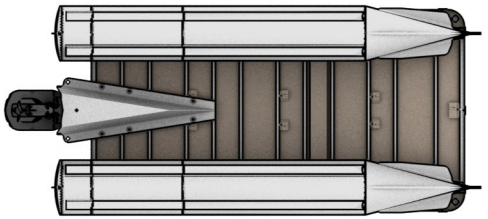

Model# 16-01

Deck Length
20'
(Scale 24")

20' Pontoon w/ Transom Pod
(Needs lightweight electronics, battery etc.)

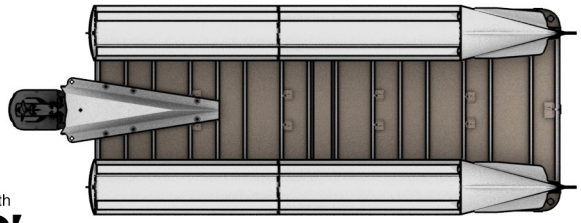

Model# 20-00

20' Pontoon w/ Transom Pod + Sporttoon

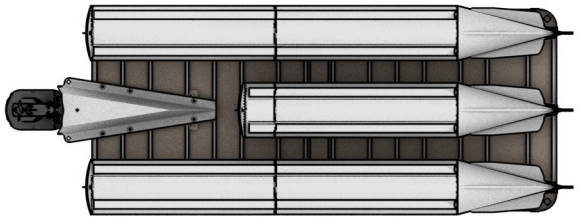

Model# 20-01

20' Tritoon

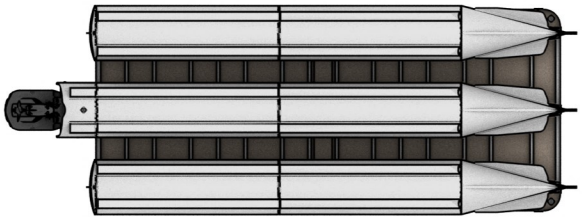

Model# 20-02

Deck Length
24'
(Scale 28.8")

24' Pontoon w/ Transom Pod

Model# 24-00

24' Pontoon w/ Transom Pod + Sporttoon

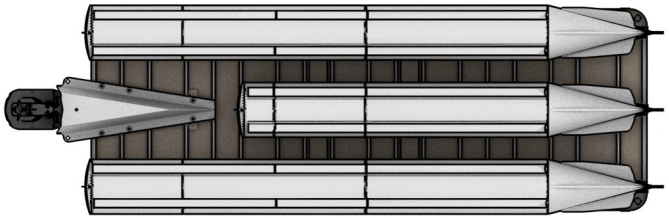

Model# 24-01

24' Tritoon

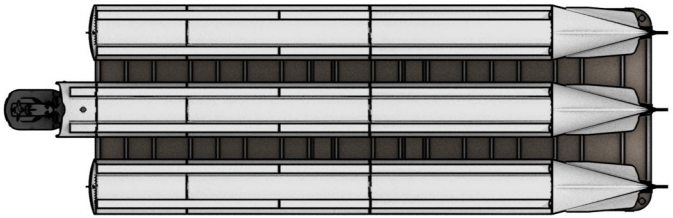

Model# 24-02

24' Tritoon w/ Dual Motors

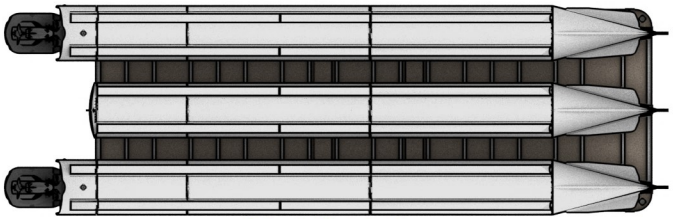

Model# 24-03

24' Tritoon w/ Triple Motors

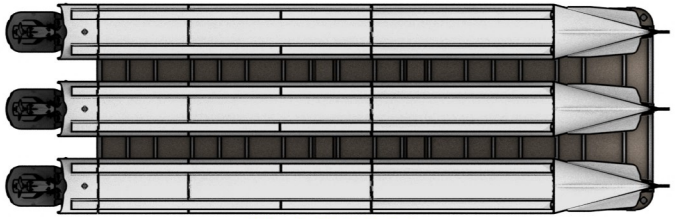

Model# 24-04

SPYKER WORKSHOP

SPYKER WORKSHOP - 1/10TH PONTOON KIT

Pontoon Assembly Guide (Parts will vary depending on which KIT you bought, see 'Pontoon Models' page)

! Do not drill into resin parts they will crack.
● If you need to make a hole, carefully rotate an X-Acto blade.

STEP 1

Start by sanding and then gluing the pontoons together as shown
Make sure to glue the bulkheads inbetween (Flat spot on bottom)
Use the 'Pontoon Models' page as reference for how to assemble.

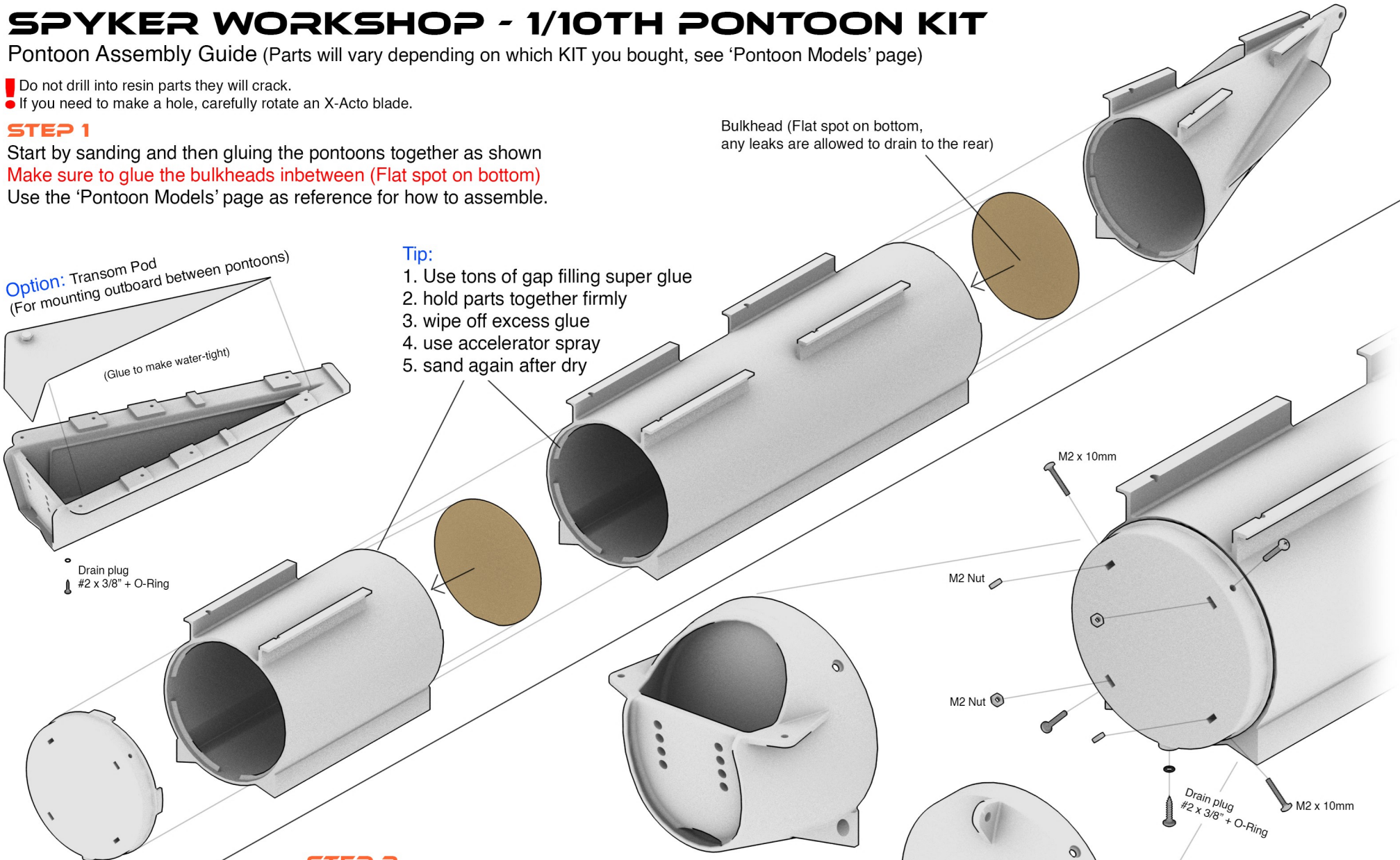

STEP 2

Paint and assemble option parts:
(I used: Rust-Oleum® Bright Coat Metallic Aluminum with no primer or topcoat)

! STEP 3

! Test pontoons for leaks in
● water before attaching to deck

SPYKER WORKSHOP

SPYKER WORKSHOP - 1/10TH PONTOON KIT

Deck Assembly Guide

STEP 1

Glue deck together using the wide plastic strips
(Use wax paper behind to not glue to the table)

Tip: The deck parts are 3D printed with PETG (FDM printer).
The deck is much stronger then the resin printed parts.
You can drill and screw directly into PETG when mounting the fence and furniture etc. (Do not drill into resin prints)

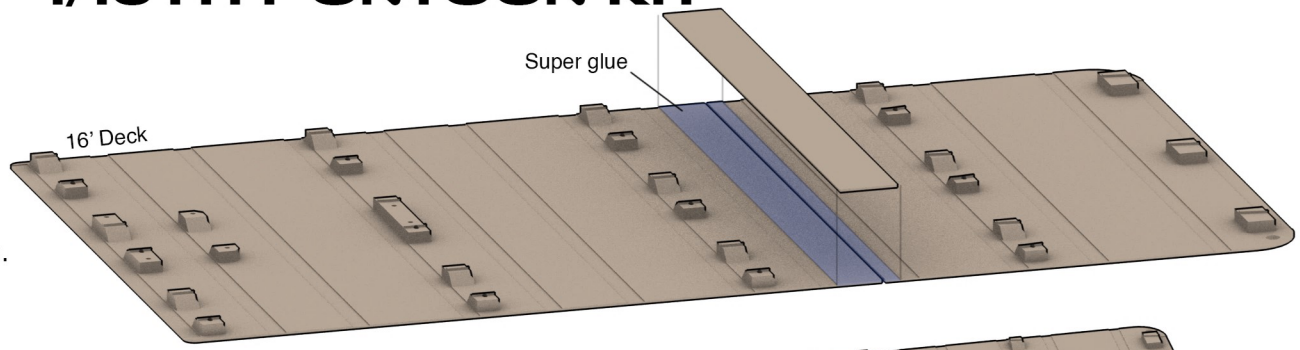

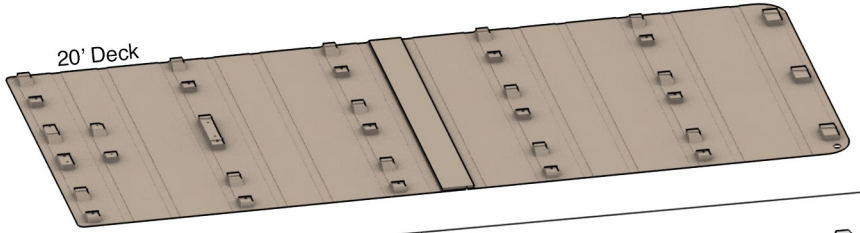

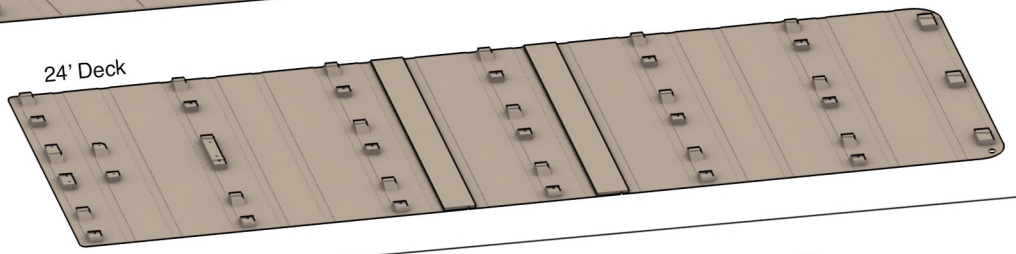

STEP 2

Spray paint the deck, and beams before gluing.
Recommend brown paint for the deck (To look like plywood)
Aluminum for the beams.

STEP 3

Glue beams to bottom of the deck using the slots to line everything up.

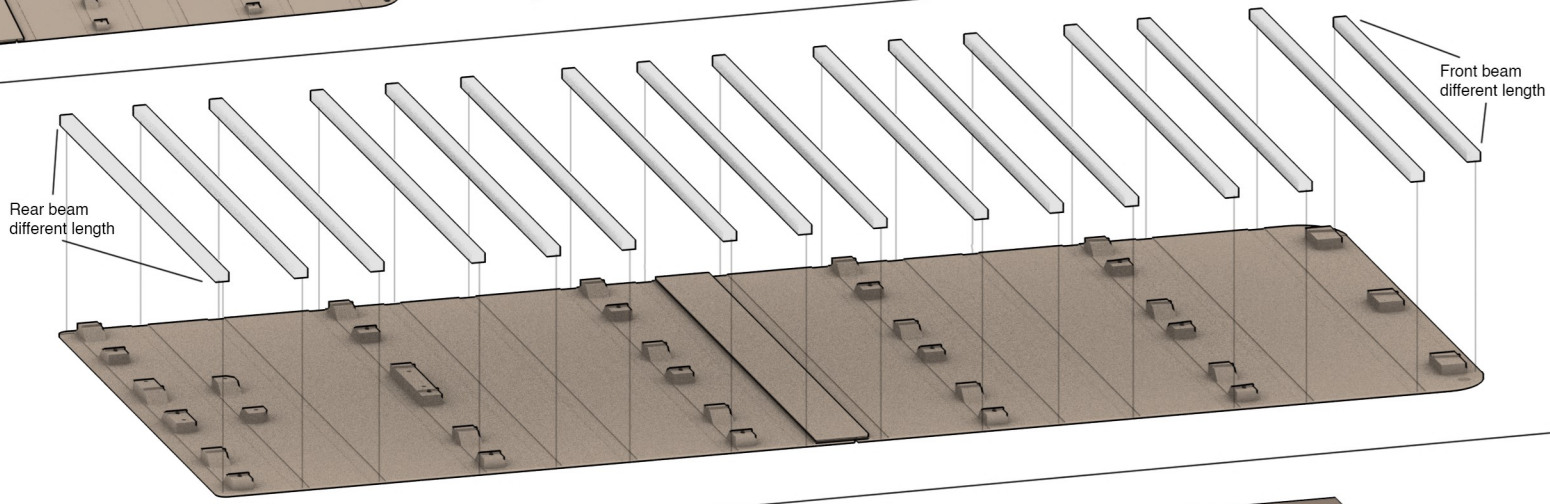

STEP 4

Option 1: Spray adhesive outdoor fabric onto the deck for a much nicer look and hidden seams. Trim around the edges.

OR

Option 2: Spray paint the deck any color (Recommend filling the seams with bondo or body filler)

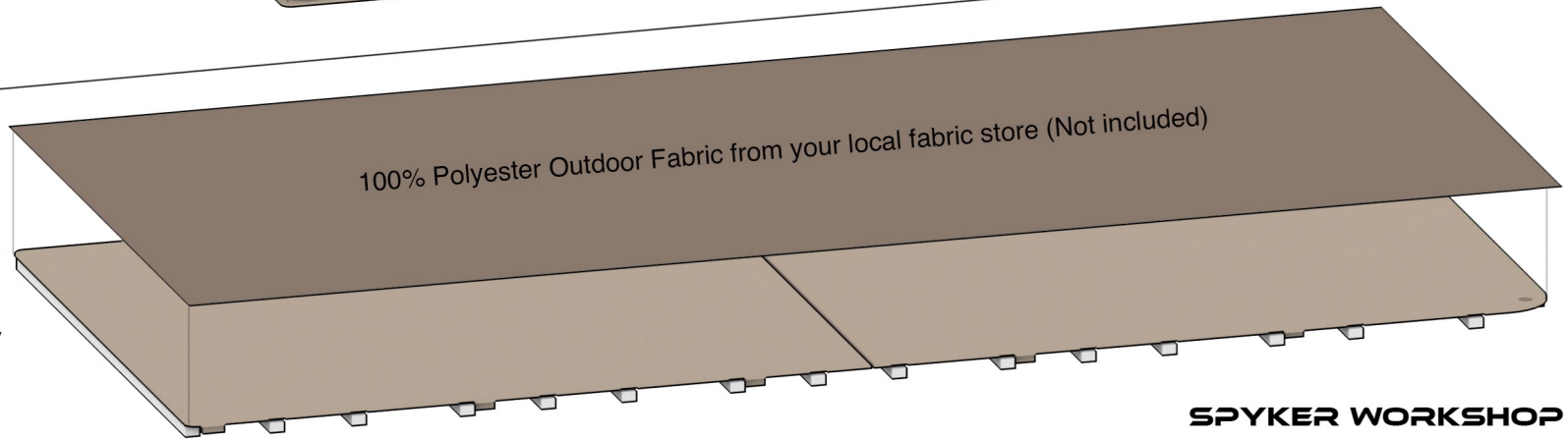

SPYKER WORKSHOP

SPYKER WORKSHOP - 1/10TH PONTOON KIT

Pontoons + Trim Assembly Guide

STEP 1

Connect pontoons, transom, sporttoon etc.
To the deck using #2 x 3/8” screws

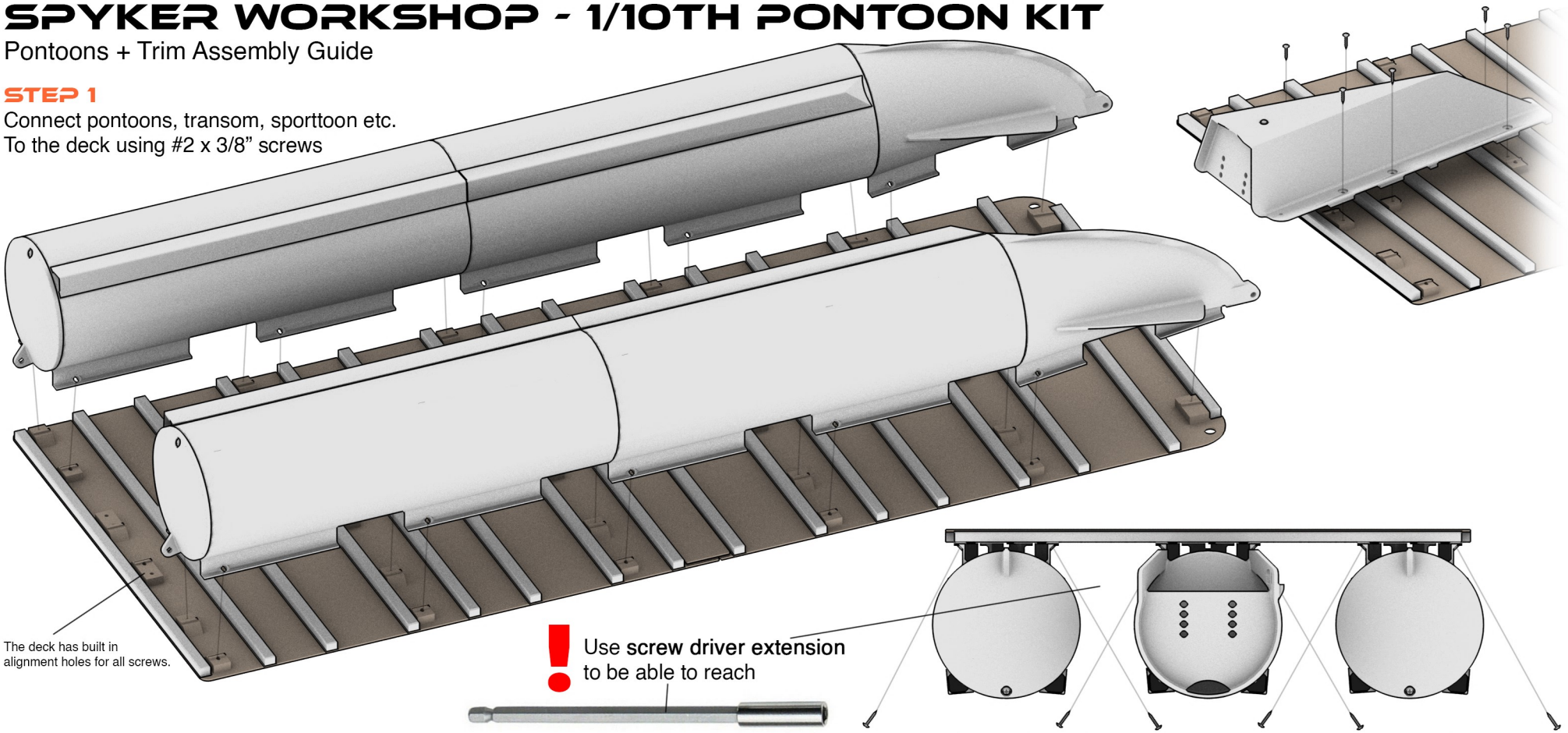

STEP 2

Paint and glue on trim parts.
(Recommend black, or aluminum paint)

*Front and Rear trims are different lengths
don’t mix them up.

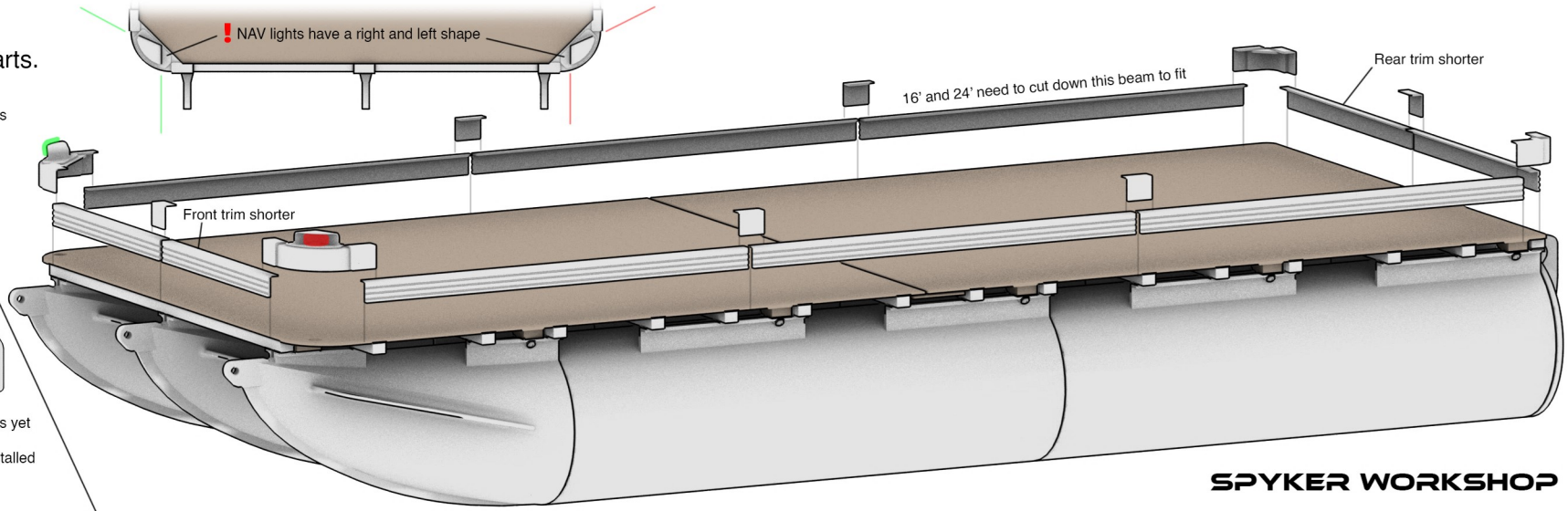

STEP 3

Glue in NAV lights

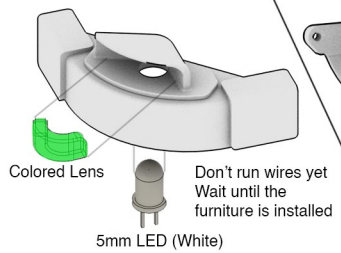

SPYKER WORKSHOP

SPYKER WORKSHOP - 1/10TH PONTOON KIT

Fence Assembly Guide

STEP 1

Decide on fence layout.
Endless possible layouts with our modular fence!
Here are some examples of possible layouts:

Using these pieces:
- Fence Post
- Short Panel
- Long Panel
- Gate
- Curved
- 90 Degree
- 45 Degree

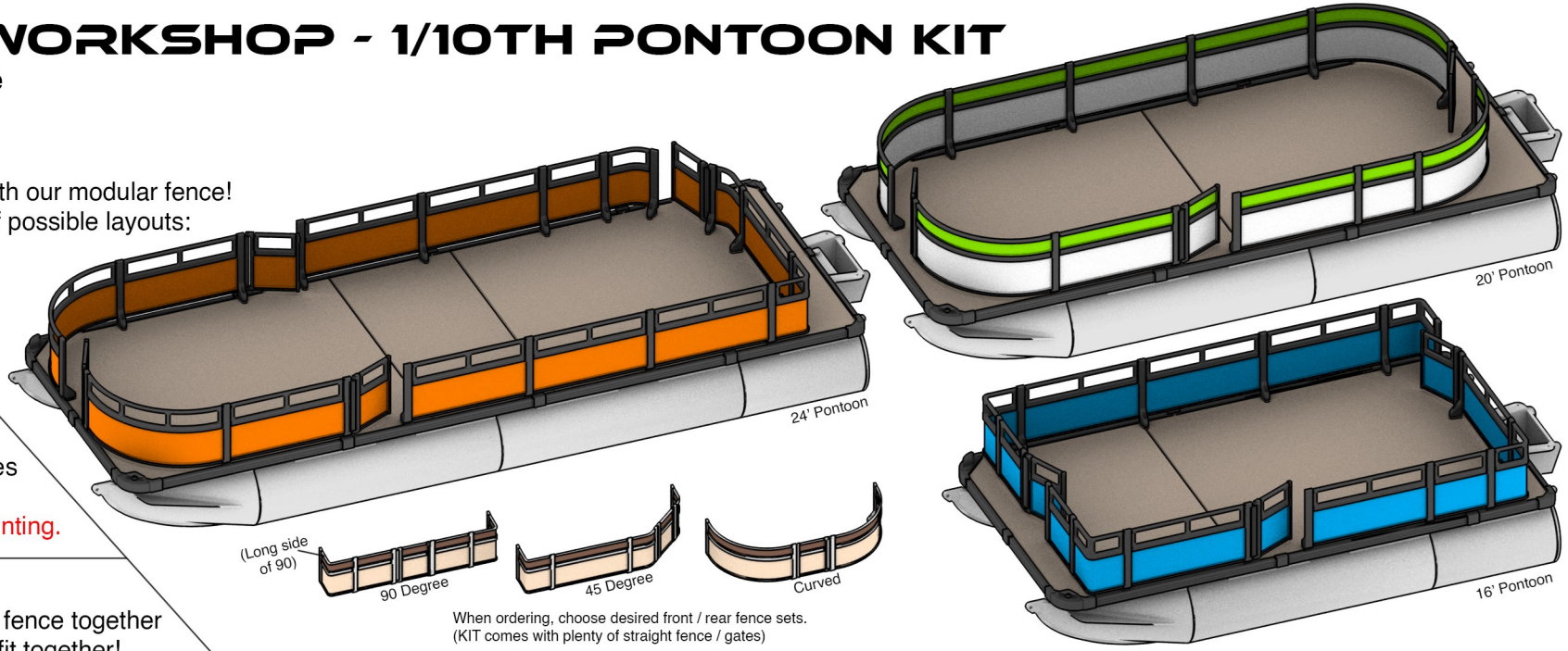

When ordering, choose desired front / rear fence sets.
(KIT comes with plenty of straight fence / gates)

STEP 2

Sand / paint the fence pieces needed for your layout.

! Do not assemble before painting.

STEP 3

After painting assemble the fence together no glue needed, they snap-fit together!
The entire fence can be assembled before screwing onto the deck.

Option: KIT includes open or closed top panels

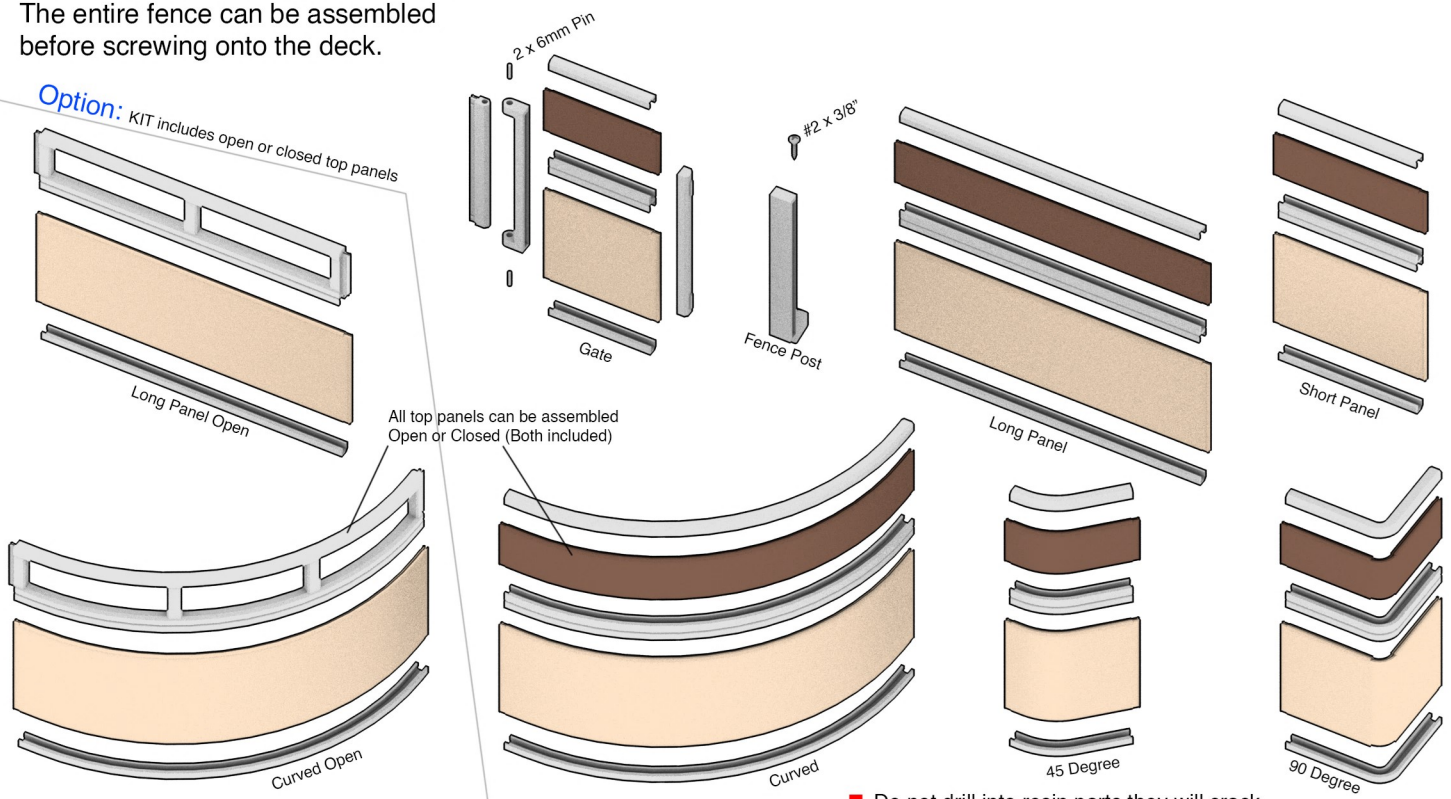

! Do not drill into resin parts they will crack.
If you need to make a hole, carefully rotate an X-Acto blade.

STEP 4

Position assembled fence on deck.
Very carefully drill 1/16" holes through the fence posts into the deck and screw together.
*Make sure to line up the gates so they open.

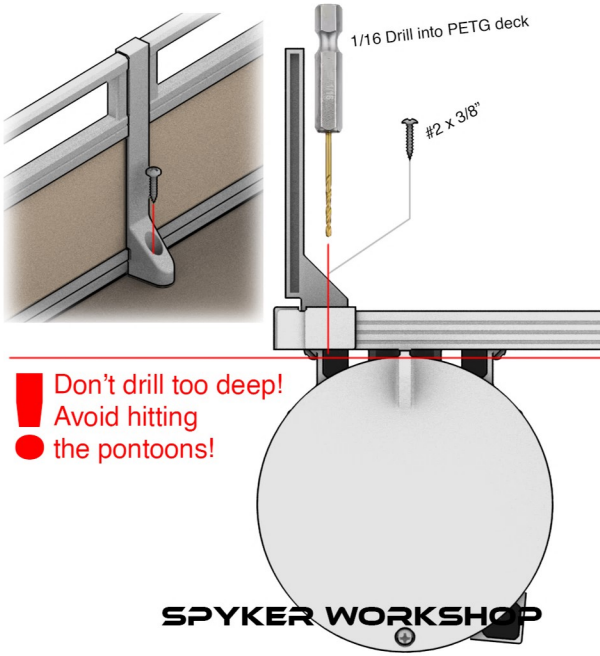

! Don't drill too deep!
Avoid hitting the pontoons!

SPYKER WORKSHOP

SPYKER WORKSHOP - 1/10TH PONTOON KIT

Seating Assembly Guide

STEP 1

Float your pontoon to check weight distribution of your electronics / battery to see where you should put the battery box seating.

***Seating adds a lot of weight make sure not to overload your pontoon!

Decide on a layout for your seating, must use at least 1 seat / lounge / couch to hide battery and electronics inside.

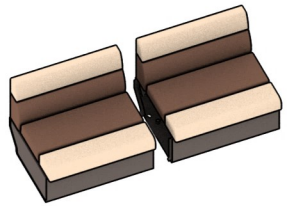

Seating Pack A
(2x single seats)

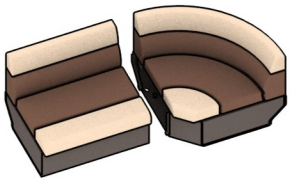

Seating Pack B
(1x single seat, 1x corner seat)

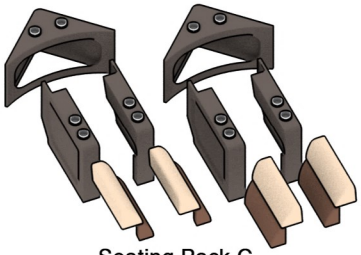

Seating Pack C
(2x corner seat tables, 4x armrests
4x lounge cushions, lots of cup holders)

STEP 2

Sand, paint and glue together seating:

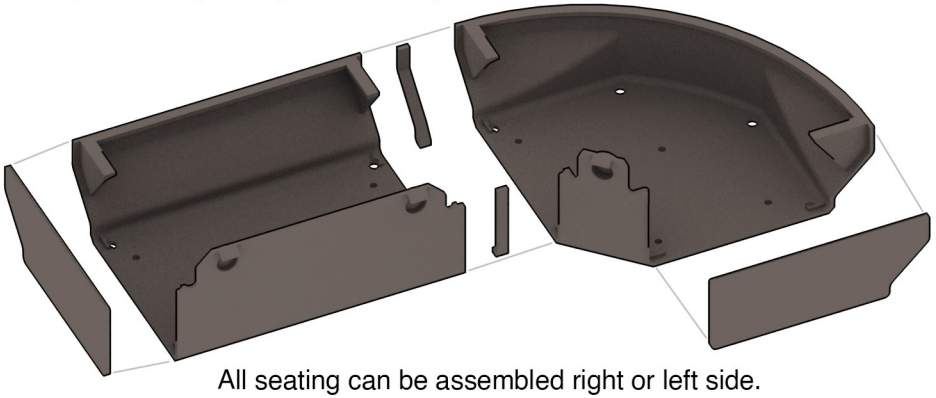

All seating can be assembled right or left side.
(Example shown is similar across all possible seating layouts.)

Seating sold in 3 different packs

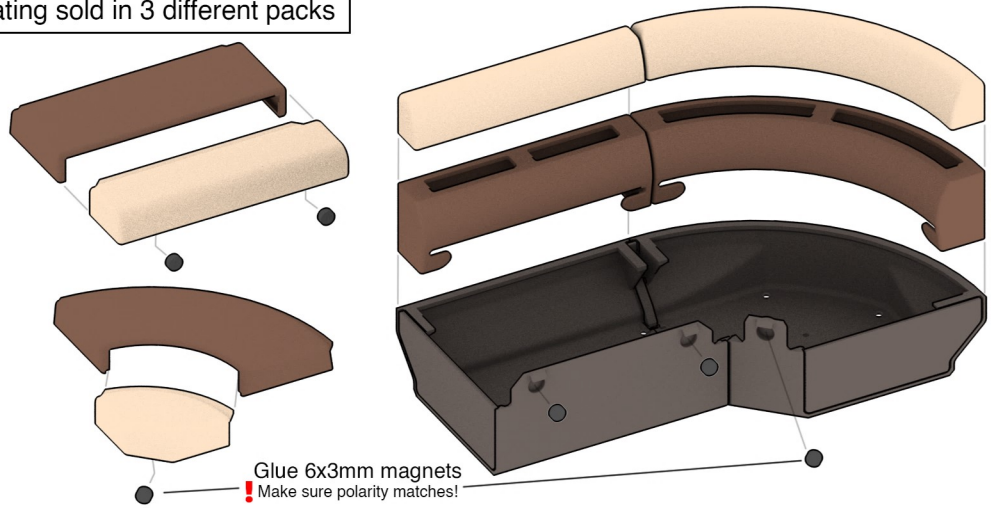

STEP 3 (Optional)

Glue armrests to seat:

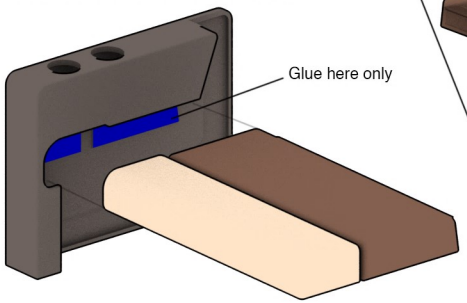

Option: Cup holders OR lounge cushions:

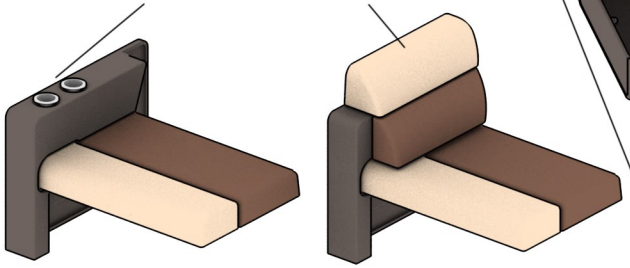

STEP 4

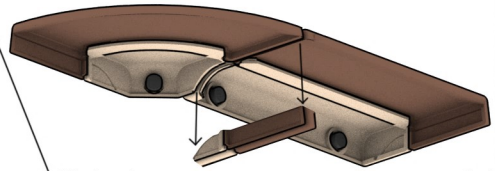

Under the seats, remove any tabs not needed to make more room for battery inside.

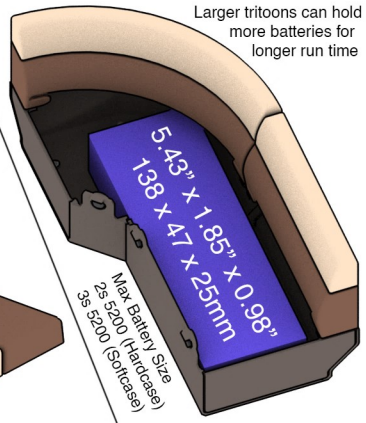

Some of the possible seating configurations:

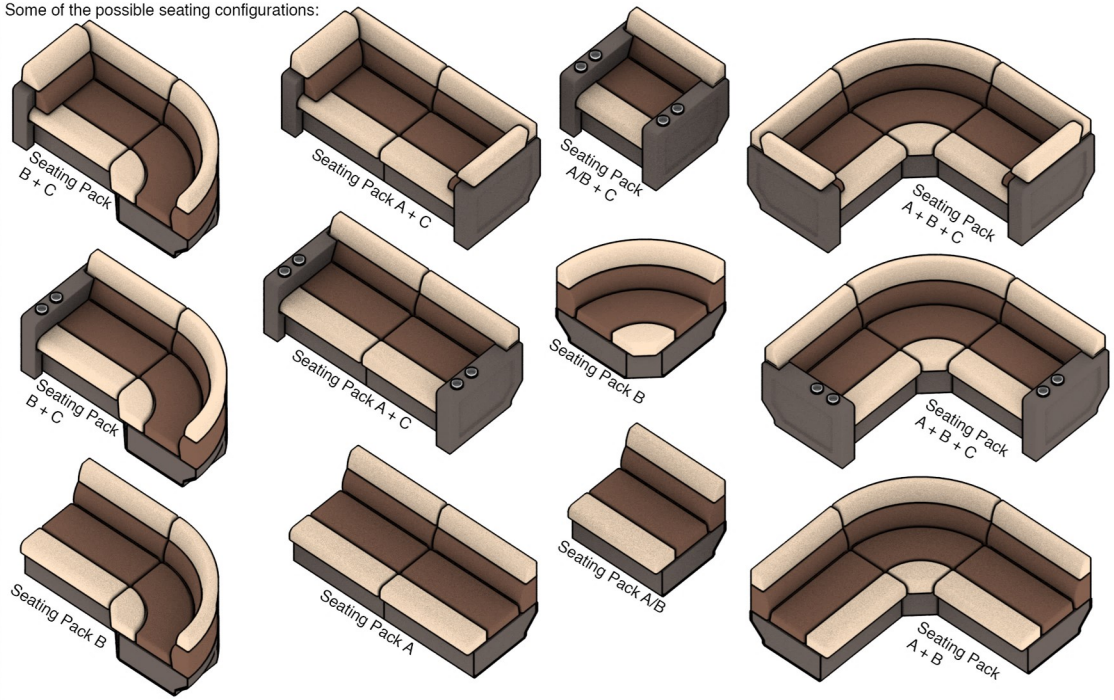

SPYKER WORKSHOP - 1/10TH PONTOON KIT

Accessories Assembly Guide

Chairs

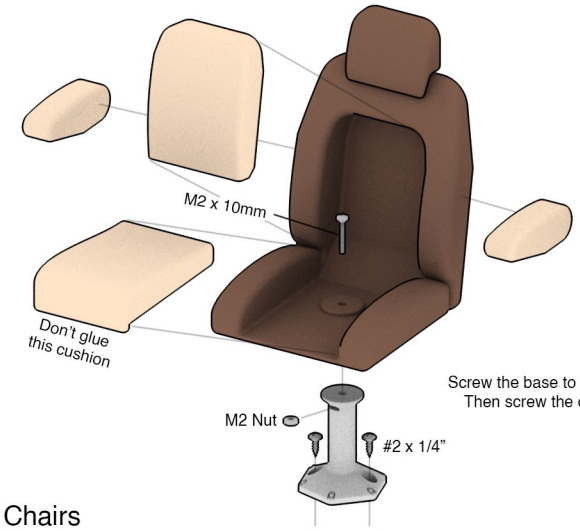

Screw the base to the deck first.
Then screw the chair down.

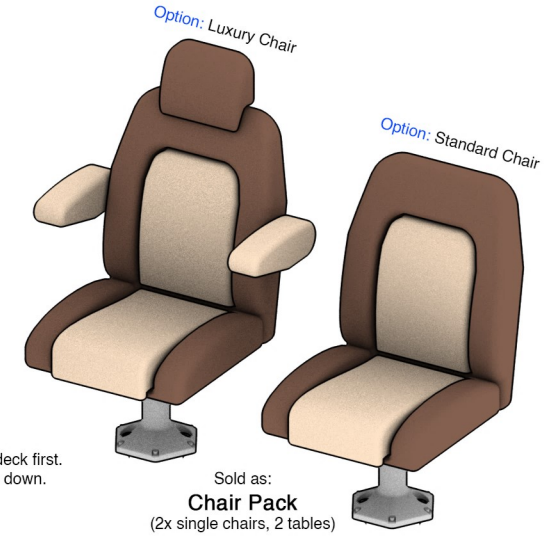

Sold as:
Chair Pack
(2x single chairs, 2 tables)

Tables

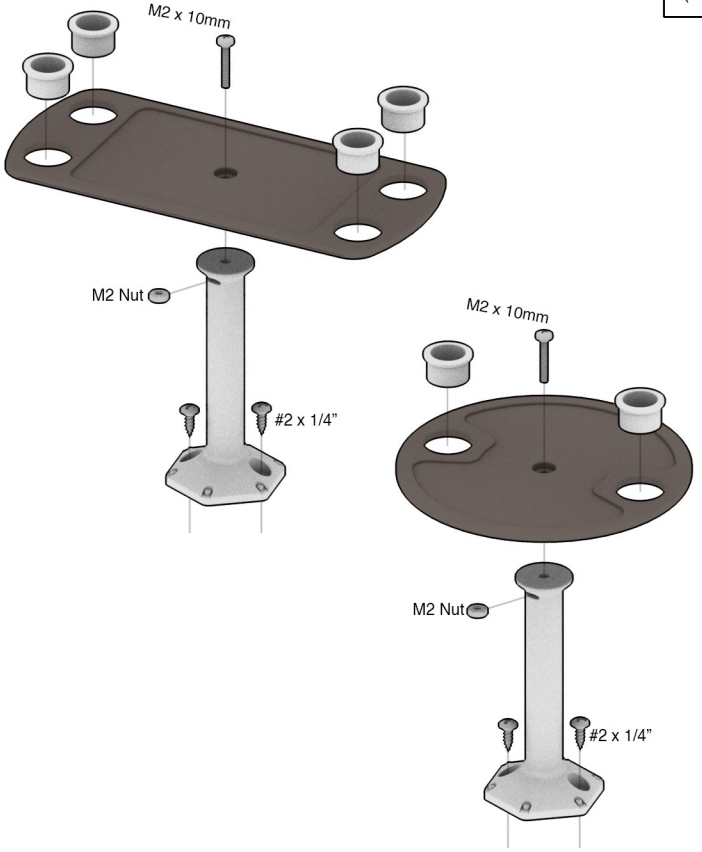

Every pontoon KIT includes a 'Console' and 'Chair Pack'
(Buy additional for more seating.)

Swimming Ladder

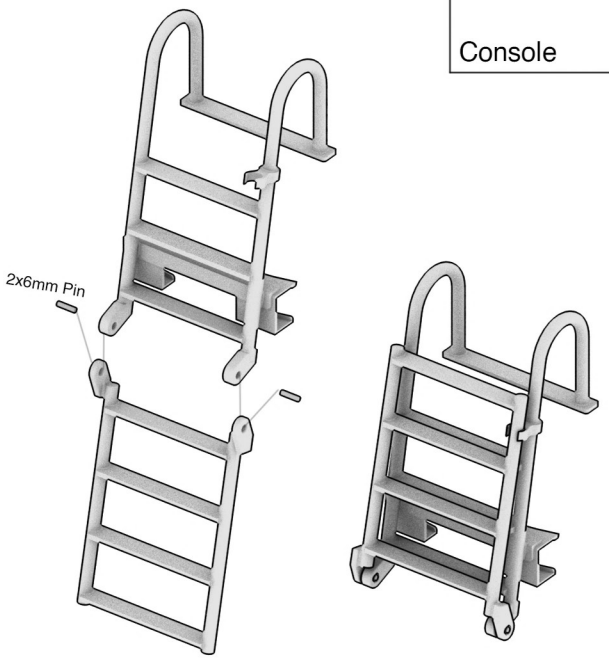

! Do not drill into resin parts they will crack.
If you need to make a hole, carefully rotate an X-Acto blade.

Console

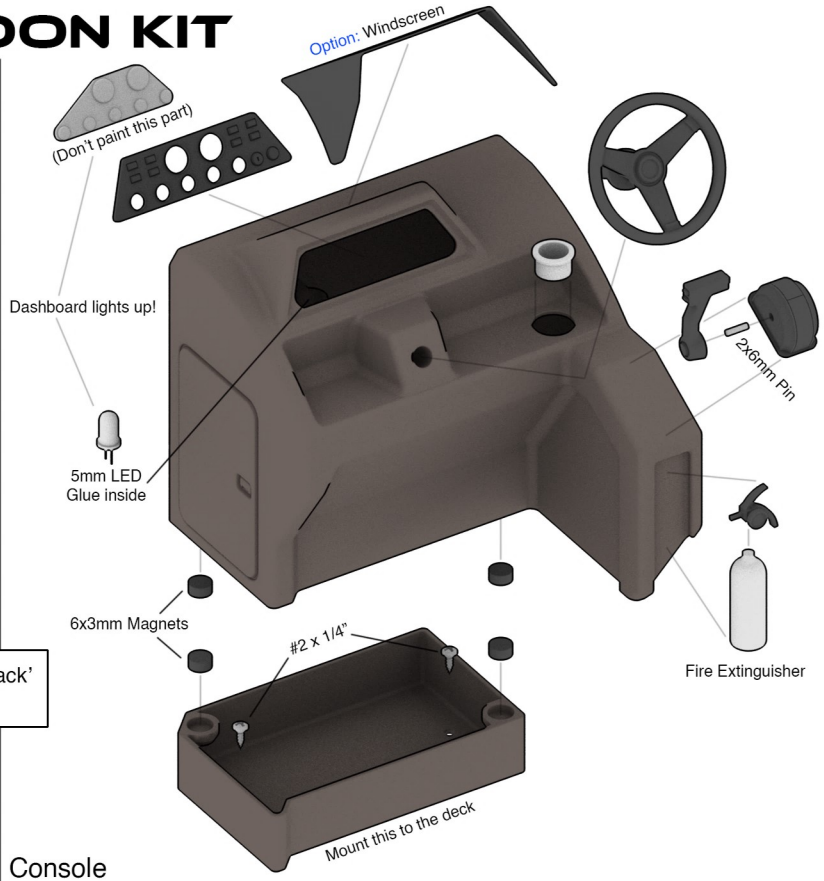

Mast Light

(Foldable)

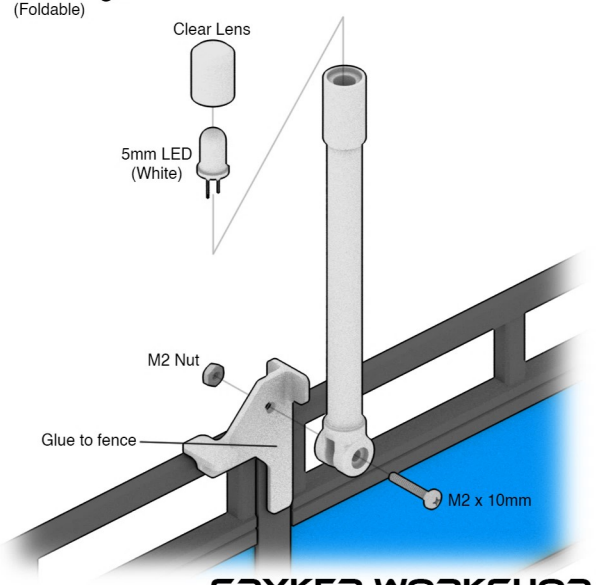

SPYKER WORKSHOP

SPYKER WORKSHOP - 1/10TH PONTOON KIT

Bimini Assembly Guide

STEP 1

Glue the parts shown together, then spray paint.

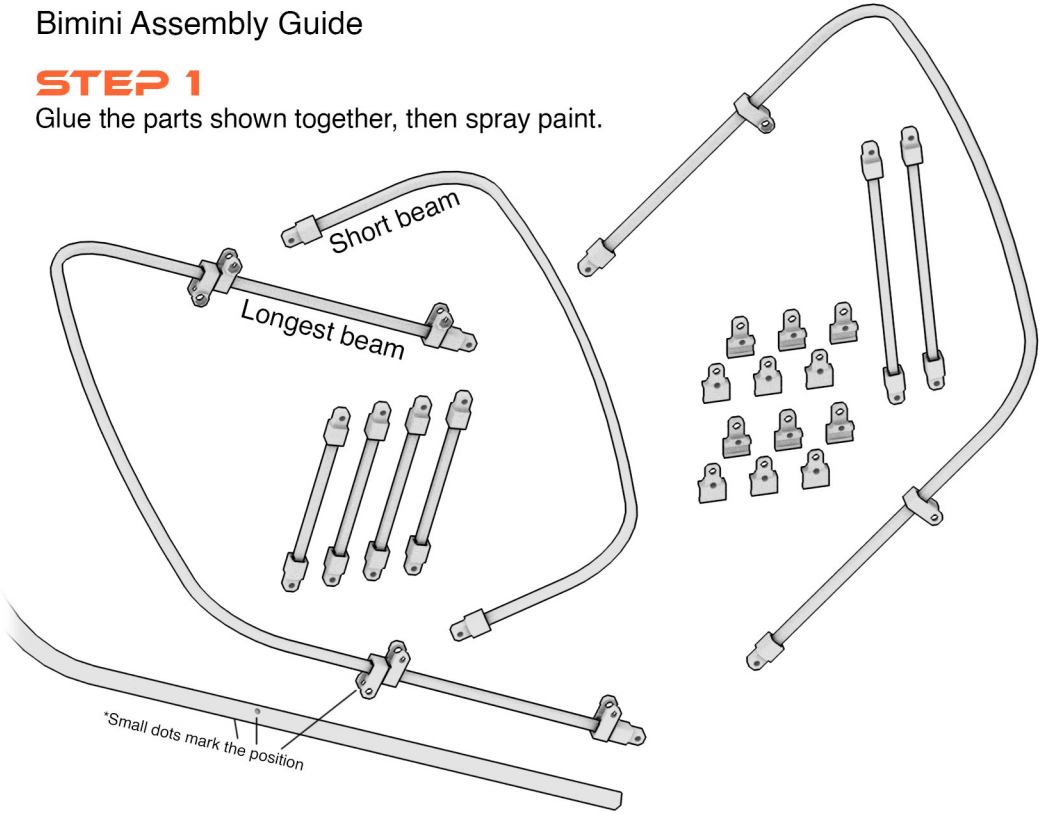

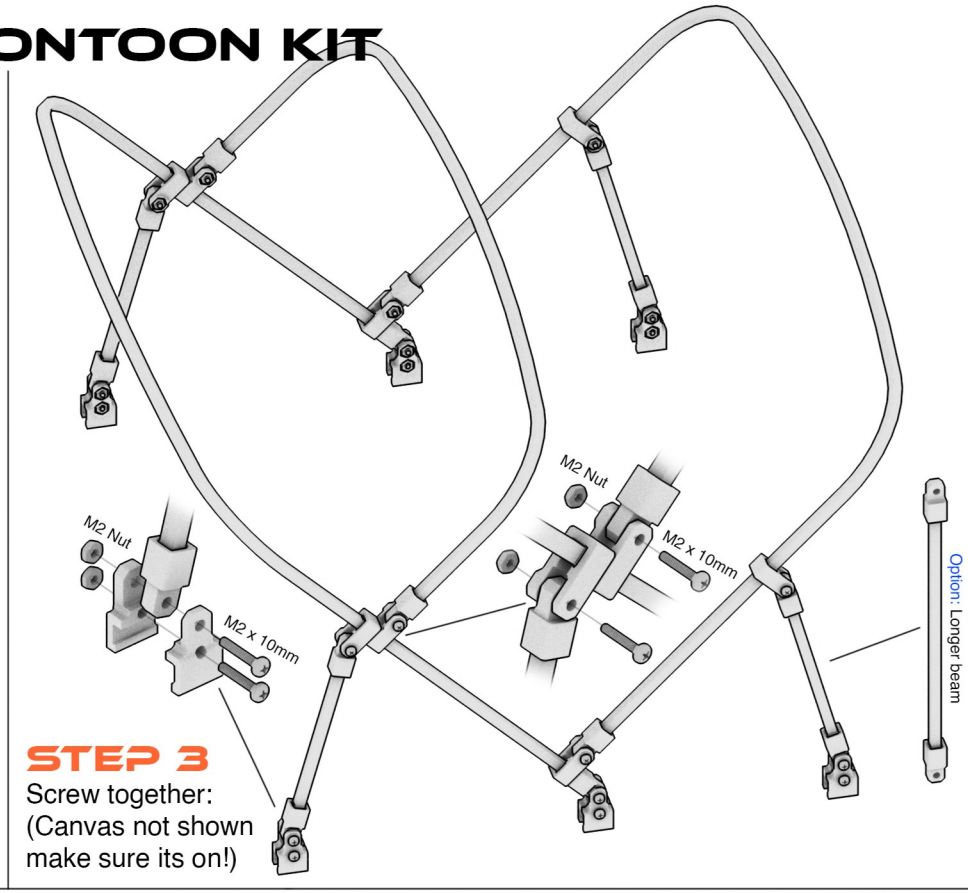

STEP 3

Screw together:
(Canvas not shown
make sure its on!)

STEP 2

Sew your own bimini canvas
Use 100% polyester outdoor fabric.
(Not included or sold)

How to make:
1. Cut 13 3/4" x 12" piece of fabric
2. Draw lines 1" away from the long edges
3. Draw lines 4" away from the short edges

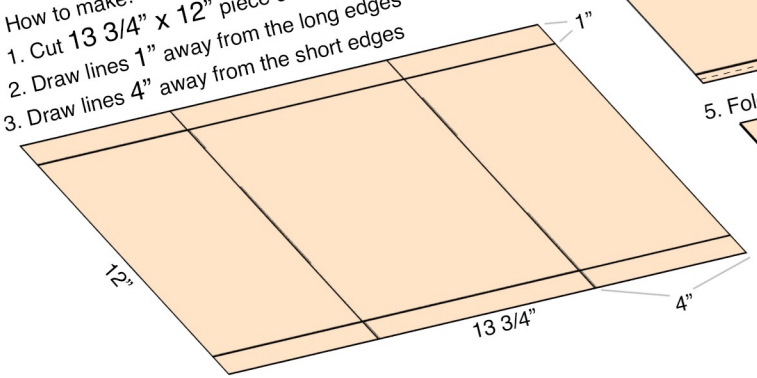

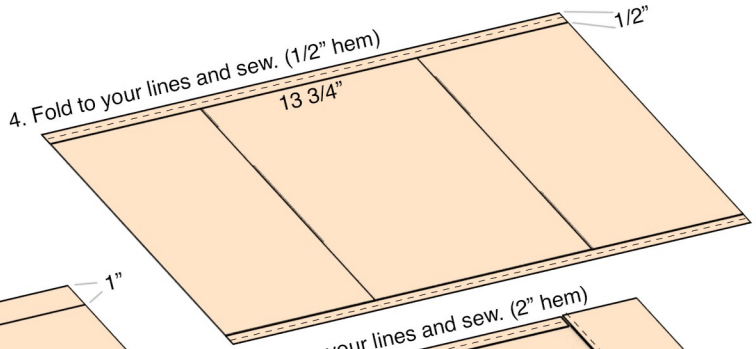

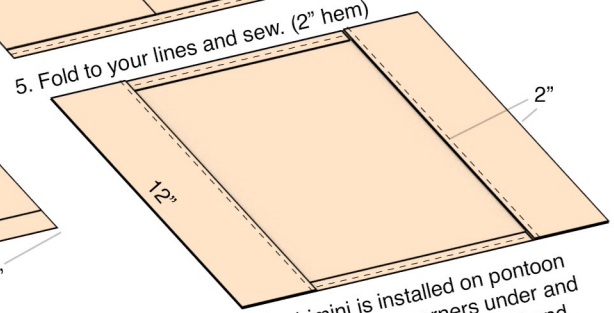

6. After bimini is installed on pontoon fold the corners under and sew by hand.

Bimini storage cover (used to wrap up bimini):
1. Cut 13" x 5" piece of fabric
2. Draw lines 1" away from all edges and sew 1/2" hems around
3. Sew on 1/2" Velcro as shown:

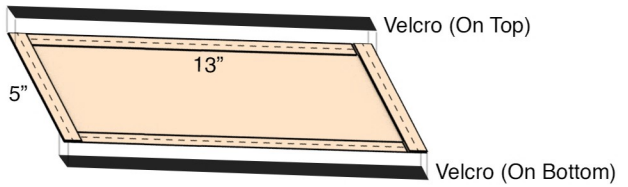

Bimini mast light:

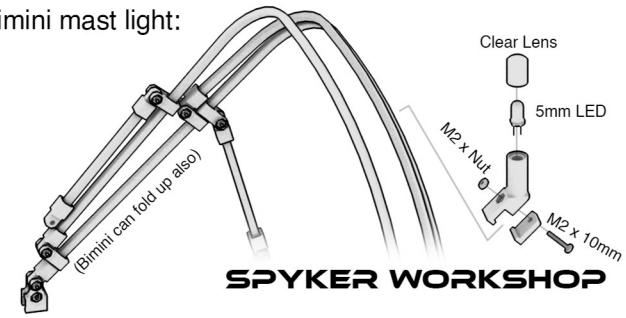

SPYKER WORKSHOP

SPYKER WORKSHOP - 1/10TH PONTOON KIT

Final Assembly Guide

24' Dual Motor Tritoon shown:
Model# 24-03

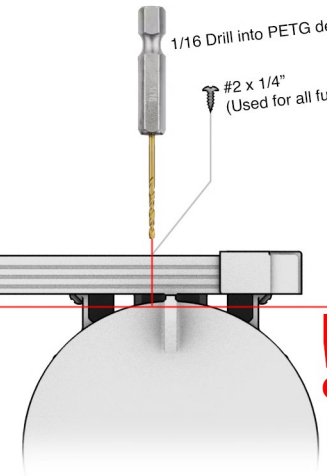

Drill and screw down all furniture.
(CAREFUL not to drill into the pontoons!)
Make sure you checked the weight balance of all your gear while floating in the water, plan ahead for battery placement.
(See Electronics Page)

Don't drill too deep!
Avoid hitting
the pontoons!

Recommend assembly order:
1. Fence
2. Seating
3. Console
4. Chairs
5. Tables
6. Run Electronics
(See Electronics Page)
7. Bimini

#2 x 1/4"

#2 x 1/4"

Glue on swimming ladder
(Not possible on triple motor setup)

Some furniture may require slight tweaks, for example:
To fit the couch tight into the 90 degree fence
you need to turn one of the fence posts around

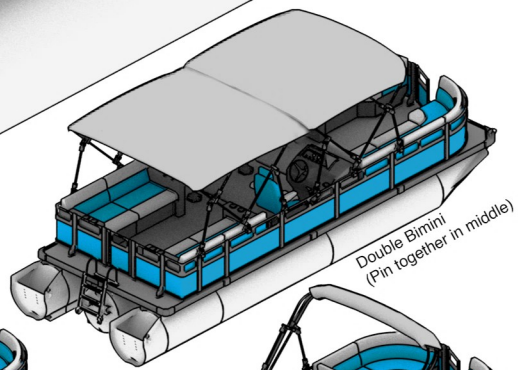

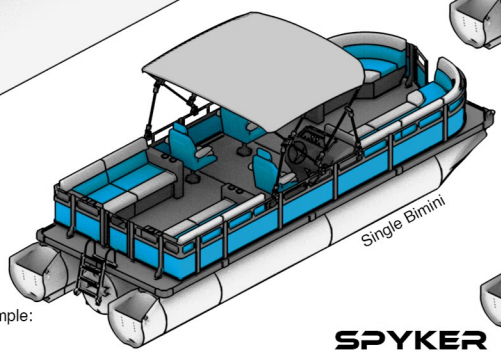

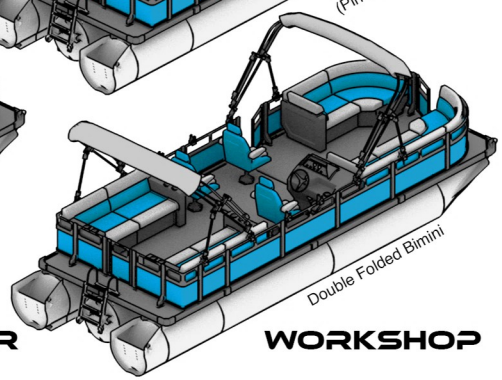

SPYKER WORKSHOP

SPYKER WORKSHOP - 1/10TH PONTOON KIT

Electronics Guide (More detailed motor info in the Spyker Outboard manual)

Plan your layout keeping weight and balance in mind.
When you know where you want all the different electronics begin to run wires under the deck just above the pontoons.

CAREFULLY Drill exsisting holes in seating for wires
(Don't drill into the resin prints, only the PETG deck)

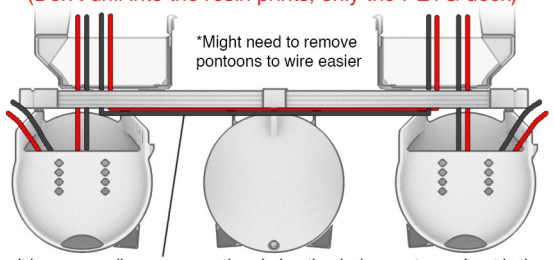

(Don't have any splices or connections below the deck so water can't get in them)

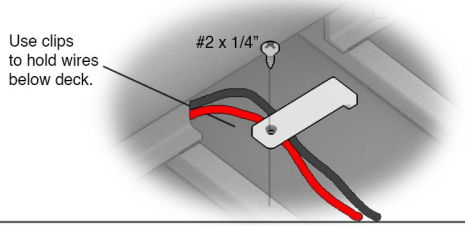

NAV Lights (Not Included or sold)

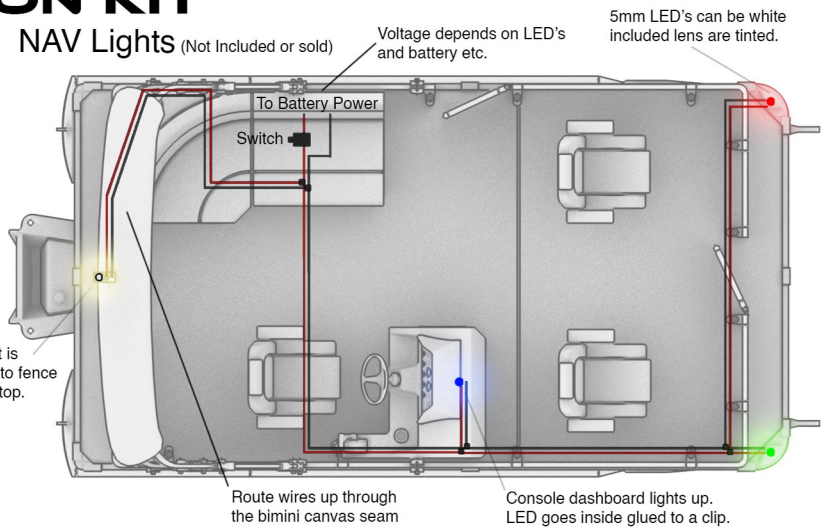

Example layouts: (Try to balance the weight of the furniture and batteries to sit nice in the water. The boat should be a little rear heavy to ride over waves.)

***Multiple servo extension cables required for most layouts

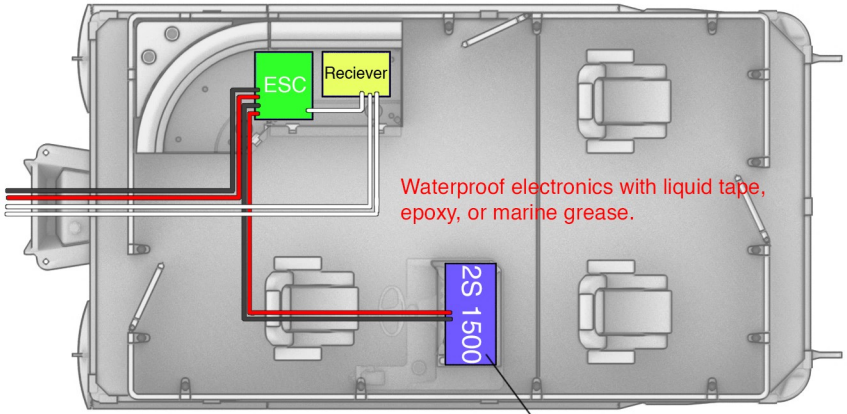

16' Pontoon Model# 16-00

Small battery for weight reduction

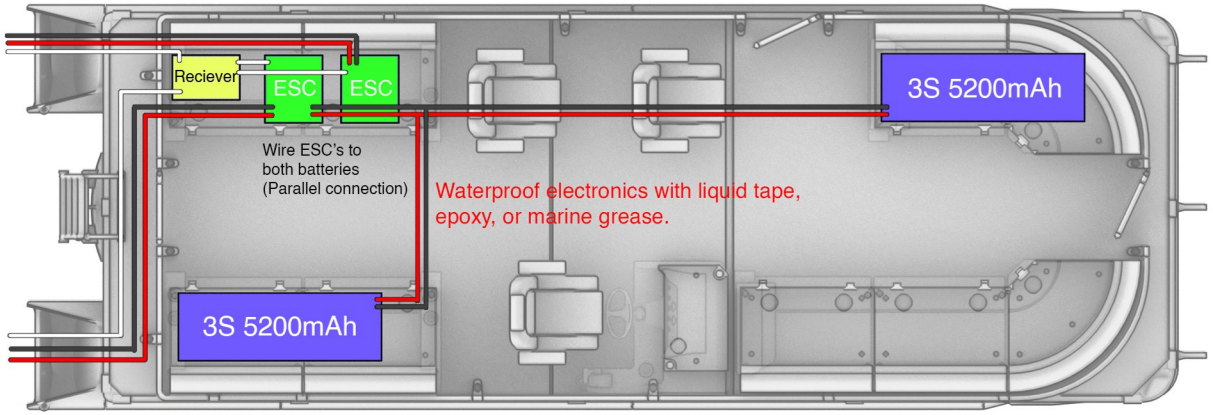

24' Trittoon Model# 24-03

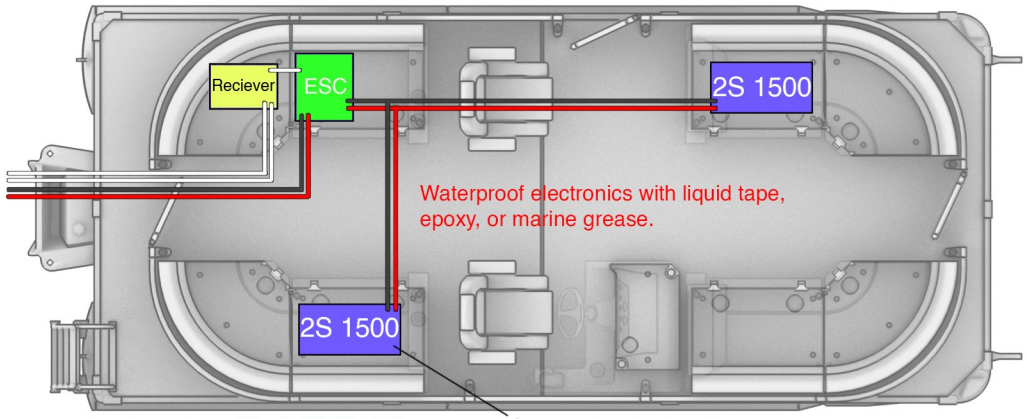

20' Pontoon Model# 20-00

Small battery for weight reduction
(Add a Sporttoon for more bouyancy for larger battery)

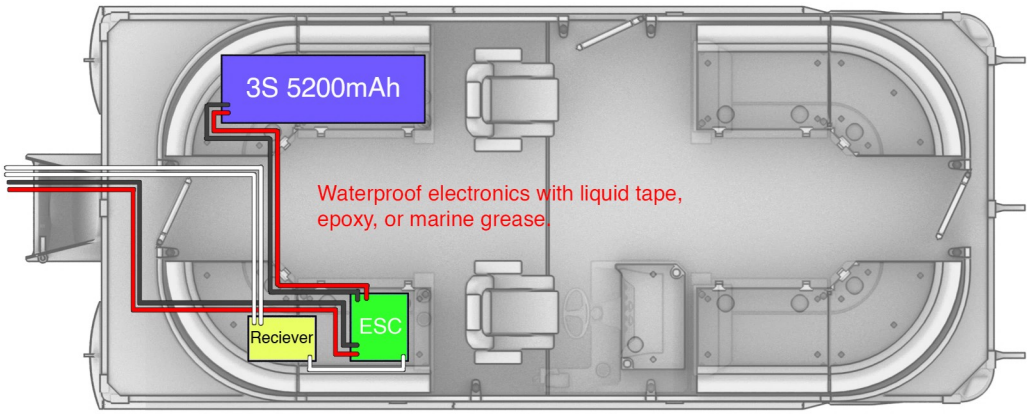

20' Trittoon Model# 20-02

SPYKER WORKSHOP

SPYKER WORKSHOP

RC Pontoon/Tritoon Boat Stand
Requires wood 3 1/2in x 3ft (1/2in or 3/4in thick) *Not included

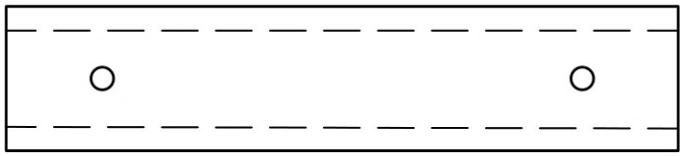

Cut out this pattern, trace onto end to drill holes

Make sure to glue felt
or some other kind
of protective liner here

Cut out this pattern, trace onto wood. 1:1 scale
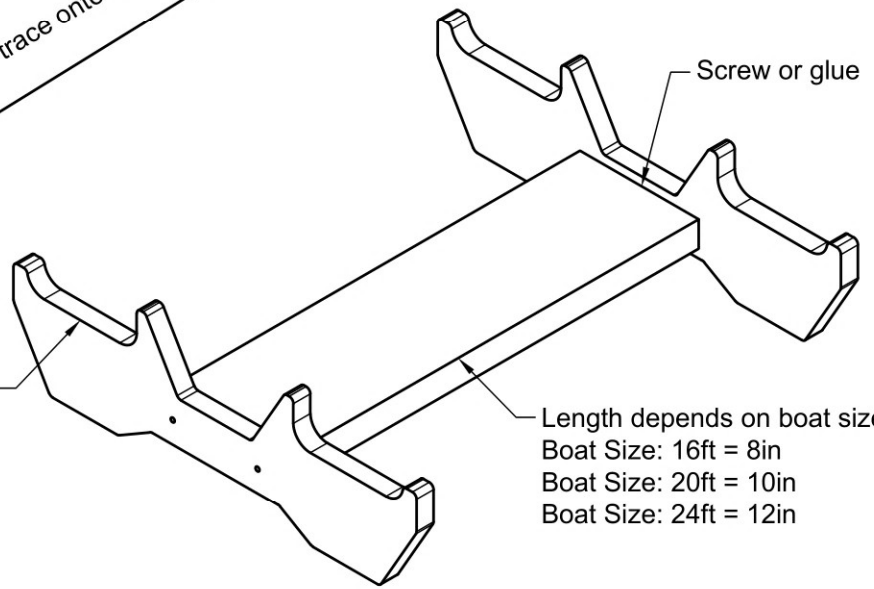
$3\frac{1}{2}$in